REVISIONS						
ZONE	LTR	DESCRIPTION	CHANGE No	DATE	BY	APPR'D
	AA	INITIAL RELEASE	DR51235	08SEP15	RMB	BLM
	AB	AB1.REMOVE EXTRA GRND WIRE FRM VIEWS AB2.ROUTE AUX TUBE BEHIND REG HOUSG	DR55833	12JAN16	RMB	BLM

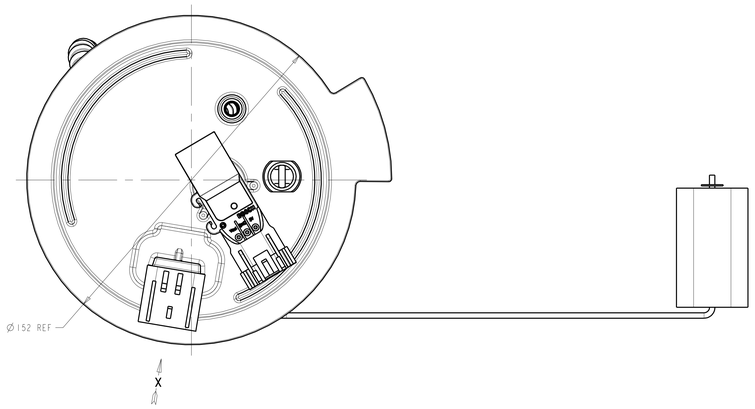

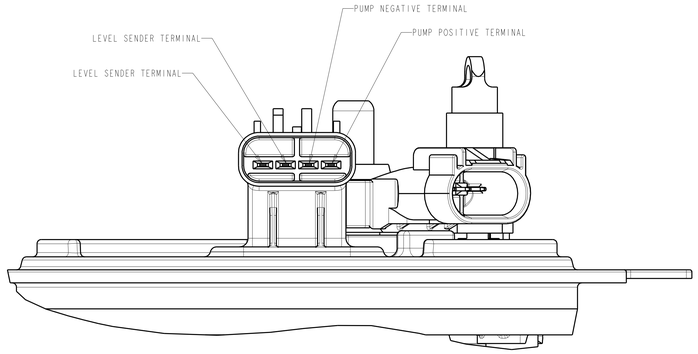

VIEW IN DIRECTION
OF ARROW "X"
E-CONNECTOR PINOUT
SCALE 2:1

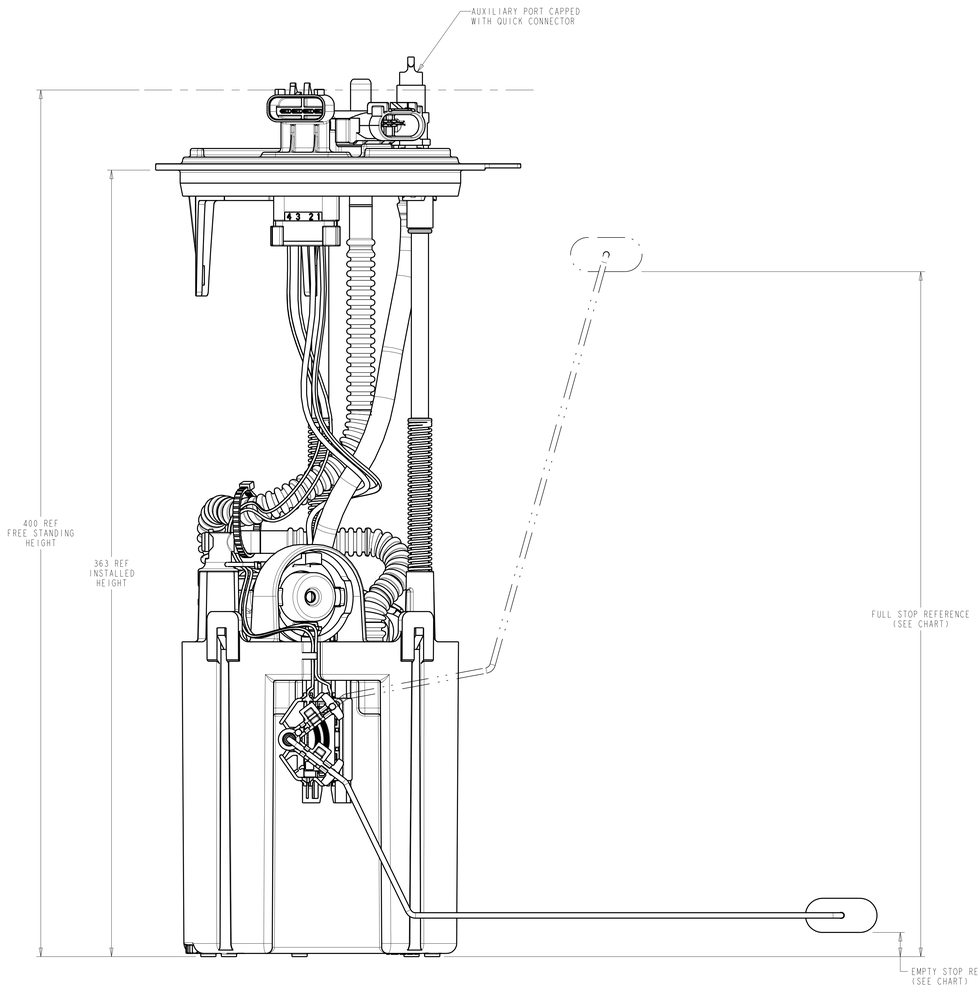

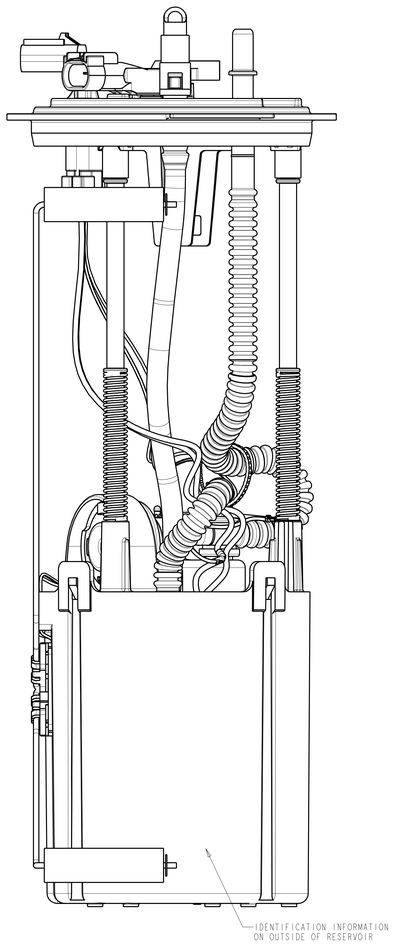

LEVEL SENDER UNIT HEIGHT VS RESISTANCE		
FLOAT POSITION	HEIGHT (mm)	RESISTANCE (Ohms)
FULL STOP	316.4 REF	10 ± 2
EMPTY STOP	10.9 REF	180 ± 4

NOTES:

1. CHANGE IN DESIGN, COMPOSITION, LOCATION OR PROCESSING FROM THE PART PREVIOUSLY APPROVED FOR PRODUCTION REQUIRES PRIOR APPROVAL BY TI AUTOMOTIVE.
2. SPECIAL CUSTOMER PACKAGING REQUIREMENTS MAY CALL FOR THE ADDITION OF SPECIFIC LABELS NOT SHOWN ON THIS DRAWING.
3. SHOWN WIRE ROUTING MAY DIFFER FROM FINISHED PRODUCT.
4. MODULE TO BE PACKAGED USING COMPONENTS NOTED ON BOM SO THAT CONTAMINATION FROM FOREIGN MATERIAL IS PREVENTED:
   - PLUG PROTECTORS ON PORTS
   - POLYBAG

▽ - DENOTES SAFETY CHARACTERISTIC
◇ - DENOTES SIGNIFICANT CHARACTERISTIC
⟐ - DENOTES HIGH IMPACT CHARACTERISTIC

TI AUTOMOTIVE CONFIDENTIAL AND PROPRIETARY.
THIS DRAWING IS ASSIGNED TO, OWNED BY, AND TI AUTOMOTIVE CLAIMS PROPRIETARY RIGHTS IN THE SUBJECT MATTER SHOWN AND DESCRIBED ON THIS DRAWING AND RETAINS ALL INTELLECTUAL PROPERTY RIGHTS. RECEIPT OF THIS DRAWING IS ACCEPTED BY THE RECEIVER UNDER THE EXPRESS CONDITION THAT IT WILL BE HELD IN CONFIDENCE. THIS DRAWING SHALL NOT BE DISCLOSED TO OTHERS OR USED FOR THE PURPOSE OF MANUFACTURE OR PROCUREMENT OF ANY PART OR PARTS SHOWN OR PART SHOWN WITHOUT TI AUTOMOTIVE'S EXPRESS WRITTEN CONSENT. NO LICENSE OR OTHER RIGHT IS GIVEN OR IMPLIED BY THE PROVISION OF THIS DRAWING TO RECIPIENT. COPYRIGHT, TI AUTOMOTIVE 2015. ALL RIGHTS RESERVED.

METRIC
ALL DIMENSIONS ARE IN MILLIMETERS

DO NOT SCALE
DECIMAL TOLERANCES UNLESS OTHERWISE SPECIFIED
ONE PLACE ±0.25 TWO PLACE ±0.13 ANGLES ±1°

THIRD ANGLE PROJECTION

DIMENSIONS IN ACCORDANCE WITH ASME Y14.5 - 2009

TI Automotive
630 COLUMBIA ST.
CARO, MI 48723
+1 989.673.7727

ENGINEER	B.MIDDLETON	03MAR15	MATERIAL/SPECIFICATION: N/A
DES.MANAGER			
DESIGNER	R.BRUBAKER	03MAR15	
CAD SYSTEM: PRO/E	SCALE: 1:1	SHEET NO. 1 OF 1	

REFERENCE (SIZE/REV.):	PLM REFERENCE/REV.: 2D: AR0039571/AB
REFERENCE (SIZE/REV.): 00011389/AA	PLM REFERENCE/REV.: 3D: AR0039569/AB

DRAWING NAME: FUEL MODULE(AFTMKT F350-450,11-14,SUPER DTY)

SIZE: A0 DRAWING NUMBER: TU2001HP